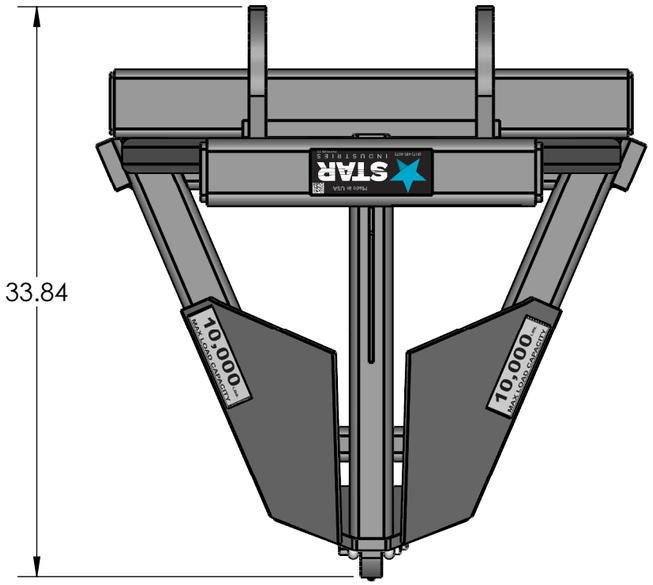

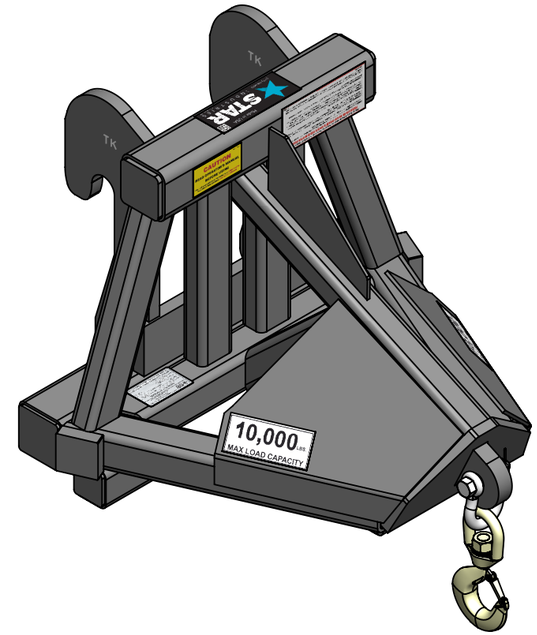

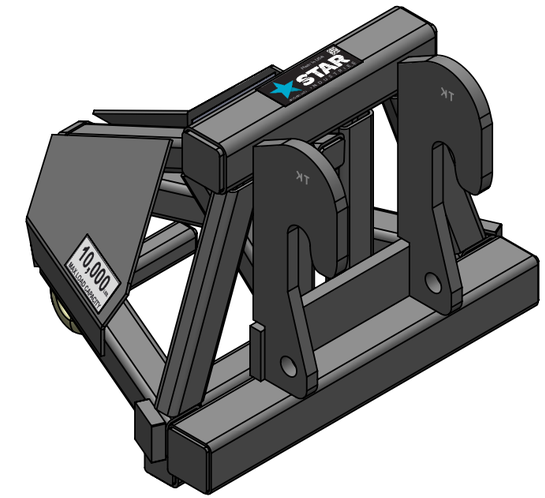

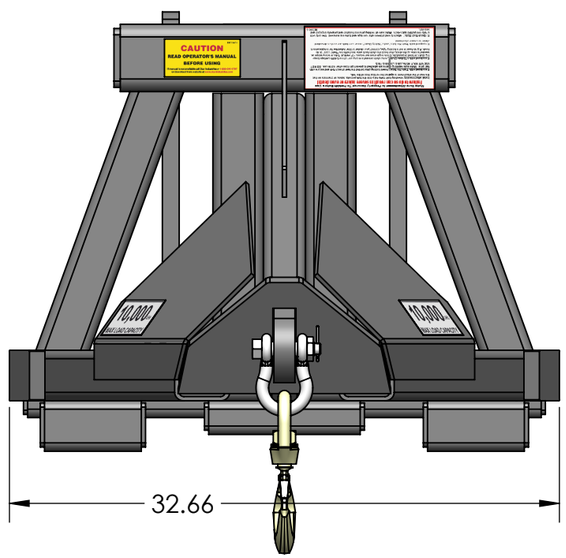

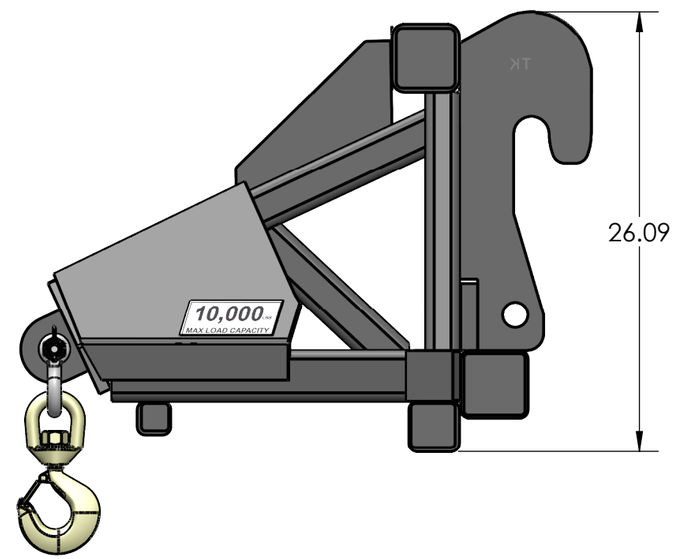

STAR INDUSTRIES
Phone: (800) 541-1797
(817) 485-6073
Fax: (817) 428-6008
4101 Garland Dr. Fort Worth, TX 76117 Email: mail@starindustries.com

Dealer Drawing

PROPRIETARY AND CONFIDENTIAL
THE INFORMATION CONTAINED IN THIS DRAWING IS THE SOLE PROPERTY OF STAR INDUSTRIES. ANY REPRODUCTION IN PART OR AS A WHOLE WITHOUT THE WRITTEN PERMISSION OF STAR INDUSTRIES IS PROHIBITED.

TITLE:		
2' 10K Truss Boom for Skytrak		
	P-WEIGHT: 315.15 lbs.	DWG. NO. 1302TK