HIGH PROFILE MACHINERY GUARD - HPRO-SS-48-42-4

APPROX WEIGHT: 80.22 lbs.
DOES NOT INCLUDE WEIGHT OF POWER OR PACKAGING!!!

*** ANY ADDITIONS, DELETIONS, OR OMISSIONS MUST BE CORRECTED ON THIS DRAWING AS THIS DRAWING WILL BE CONSIDERED ALL INCLUSIVE ***
ALL GRAPHICS PROVIDED ARE FOR REFERENCE ONLY. IF CERTAIN DIMENSIONS ARE CRITICAL PLEASE VERIFY THOSE DIMENSIONS WITH YOUR SALESPERSON

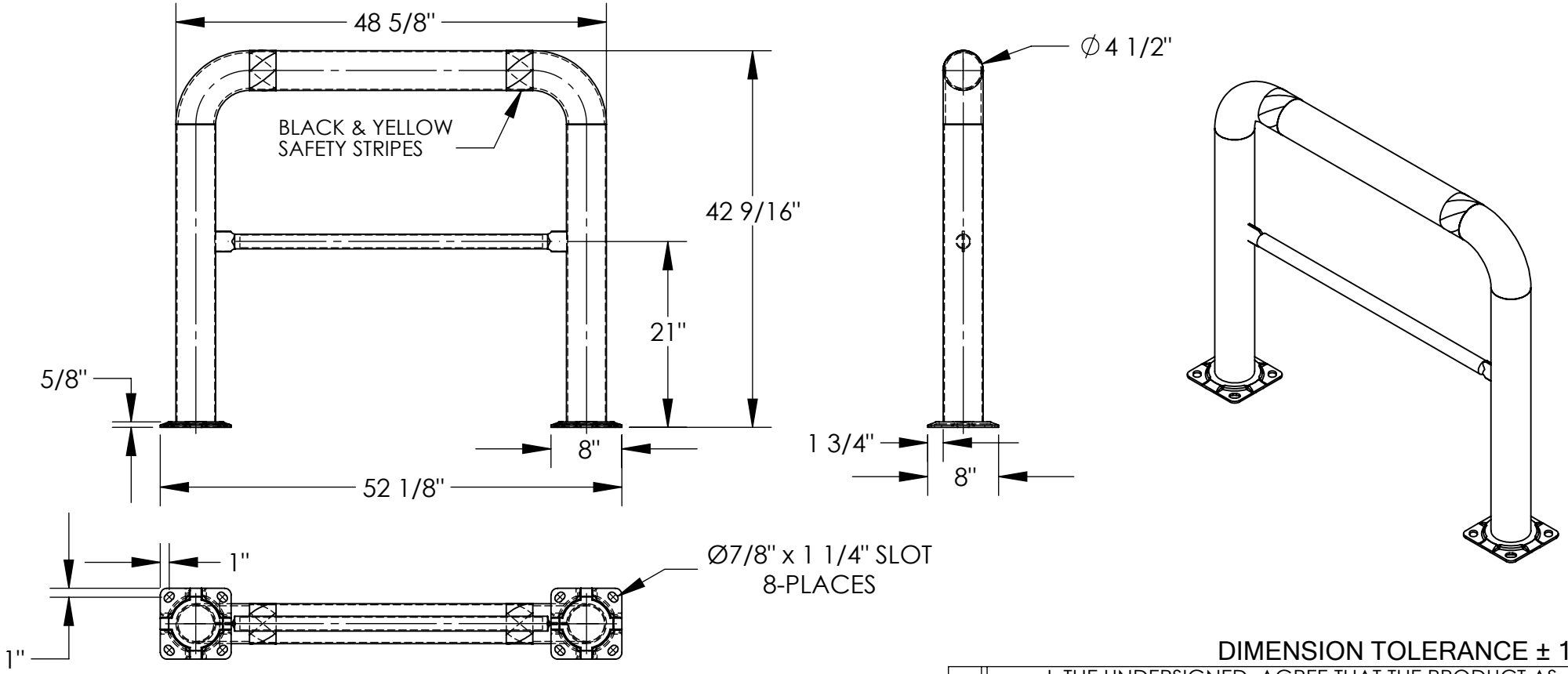

DIMENSION TOLERANCE ± 1/4"

STANDARD FEATURES

MODEL NUMBER IS HPRO-SS-48-42-4
MACHINE GUARD HEIGHT: 42 9/16"
MACHINE GUARD LENGTH: 48 5/8"
MACHINE GUARD DIAMETER: ∅4 1/2"
OVERALL LENGTH IS: 52 1/8"
INCLUDES 2 MOUNTING BRACKETS
MATERIAL/FINISH: STAINLESS STEEL
BLACK AND YELLOW SAFETY STRIPES

WELDINGTO MEET AWS
WARNING: CHECK APPLICABLE STATE
& LOCAL LAWS FOR YOUR AREA

SPECIAL FEATURES

NONE

APPROVAL

I, THE UNDERSIGNED, AGREE THAT THE PRODUCT AS REPRESENTED SATISFIES DESIGN AND DIMENSION REQUIREMENTS. I ALSO ACKNOWLEDGE MY DUTY TO CONFIRM PRODUCT AND INSTALLATION COMPLIANCE WITH ALL APPLICABLE FEDERAL, STATE AND LOCAL REGULATIONS AND STANDARDS.

ANY MODIFIED UNITS ARE NON-RETURNABLE

[ ] As drawn [ ] As marked

Signed:_____ Date:_____

Printed Name:_____

LEAD TIME WILL START UPON RECEIPT OF SIGNED APPROVAL DRAWING

FOR INTERNAL USE ONLY PROJECT SIGN OFF	
SALES	
ENG.	
FAB.	
POWER	

DISTRIBUTOR'S NAME: VESTIL MANUFACTURING		P.O.# X
		W.O.# X
DRAWN BY: ND	DATE: 6/7/2019	SALES: X
REFERENCE: X	SCALE: 1:17	FILE NAME: 23-007-117-001
QUOTED LEAD TIME: X	QUOTE # X	