MULTI-DUTY STORAGE BUILDING - MDS-96-DR

APPROX WEIGHT: 882.66 lbs.
DOES NOT INCLUDE WEIGHT OF POWER OR PACKAGING!!!

*** ANY ADDITIONS, DELETIONS, OR OMISSIONS MUST BE CORRECTED ON THIS DRAWING AS THIS DRAWING WILL BE CONSIDERED ALL INCLUSIVE ***
ALL GRAPHICS PROVIDED ARE FOR REFERENCE ONLY. IF CERTAIN DIMENSIONS ARE CRITICAL PLEASE VERIFY THOSE DIMENSIONS WITH YOUR SALESPERSON

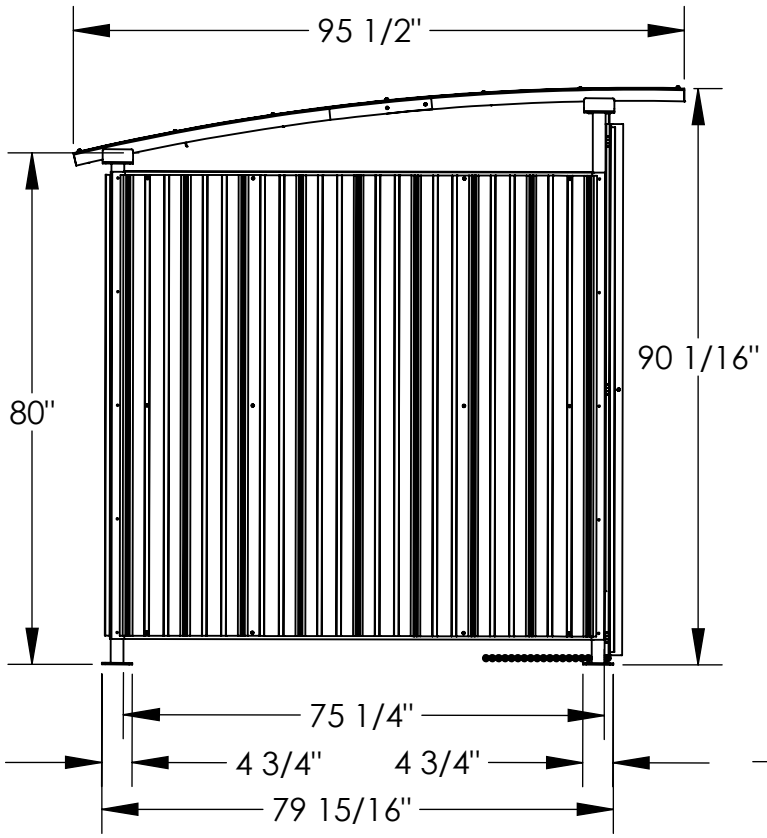

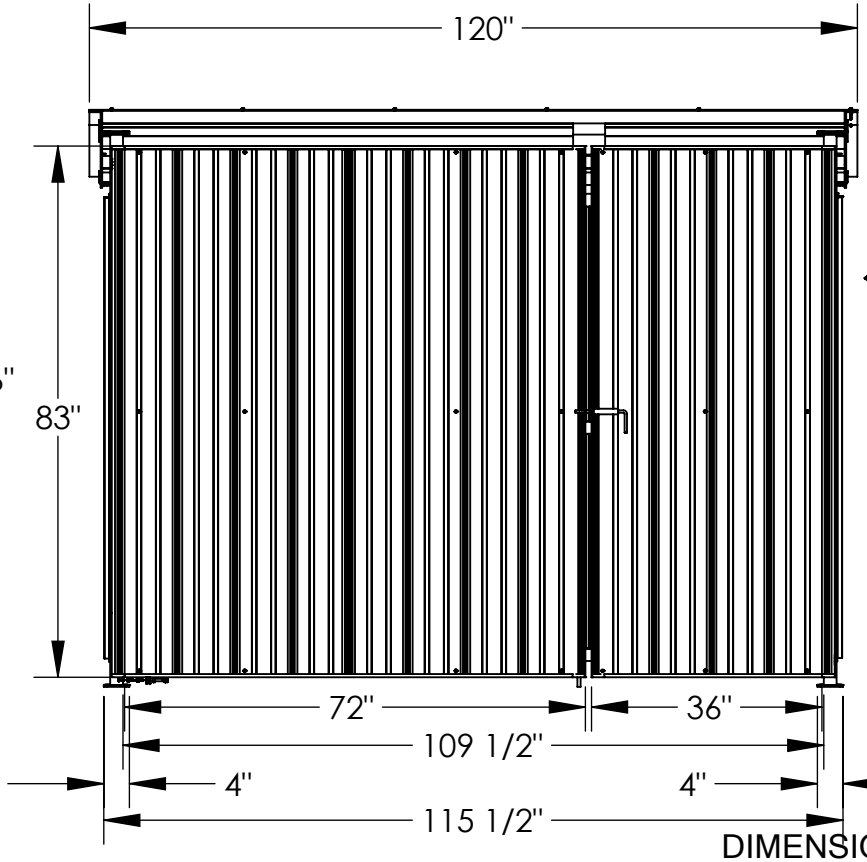

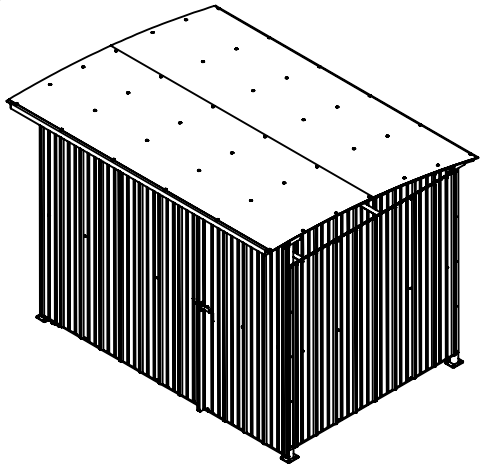

3D VEIW SHOWN FOR REFERENCE ONLY

DIMENSION TOLERANCE ± 1/4"

STANDARD FEATURES

MODEL NUMBER IS MDS-96-DR
OVERALL WIDTH IS 120"
USABLE WIDTH IS 109 1/2"
OVERALL DEPTH IS 95 1/2"
USABLE DEPTH IS 75 1/4"
OVERALL HEIGHT IS 90 1/16"
USABLE HEIGHT IS 80"
UNIT SUPPLIED W/ LAG DOWN PLATES
DOORS SIZES ARE 72" W X 83" H
& 36" W X 83" H
HOLDS SNOW UP TO 45 LBS PER SQ-FT
FRAME IS TOUGH BAKED IN POWDER COAT BLUE FINISH

SPECIAL FEATURES

NONE

APPROVAL

I, THE UNDERSIGNED, AGREE THAT THE PRODUCT AS REPRESENTED SATISFIES DESIGN AND DIMENSION REQUIREMENTS. I ALSO ACKNOWLEDGE MY DUTY TO CONFIRM PRODUCT AND INSTALLATION COMPLIANCE WITH ALL APPLICABLE FEDERAL, STATE AND LOCAL REGULATIONS AND STANDARDS.

ANY MODIFIED UNITS ARE NON-RETURNABLE

[ ] As drawn [ ] As marked

Signed:_____ Date:_____

Printed Name:_____

LEAD TIME WILL START UPON RECEIPT OF SIGNED APPROVAL DRAWING

FOR INTERNAL USE ONLY PROJECT SIGN OFF	
SALES	
ENG.	
FAB.	
POWER	

DISTRIBUTOR'S NAME: VESTIL MANUFACTURING			P.O.# X
			W.O.# X
DRAWN BY: B.NOTHNAGEL	DATE: 1/27/2016		SALES: X
REFERENCE: X		SCALE: 1:30	FILE NAME: 41-007-012
QUOTED LEAD TIME: X		QUOTE # X	